ORTAL
YOUR LIFE. YOUR FIRE

Wilderness 60 RS - Screen

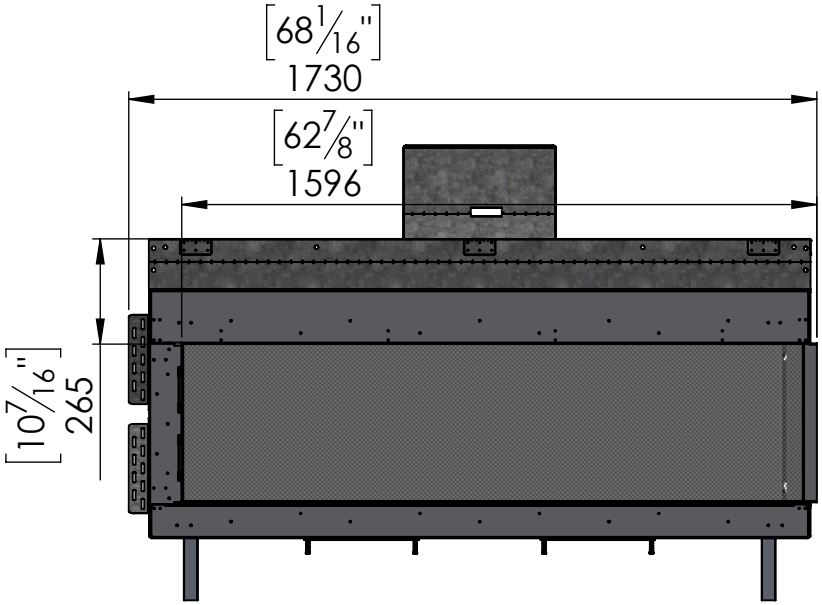

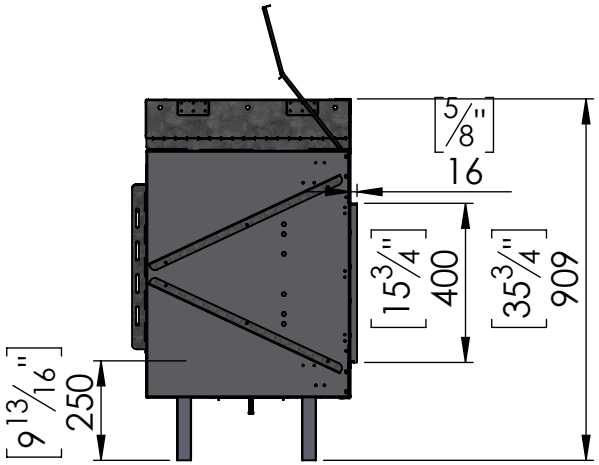

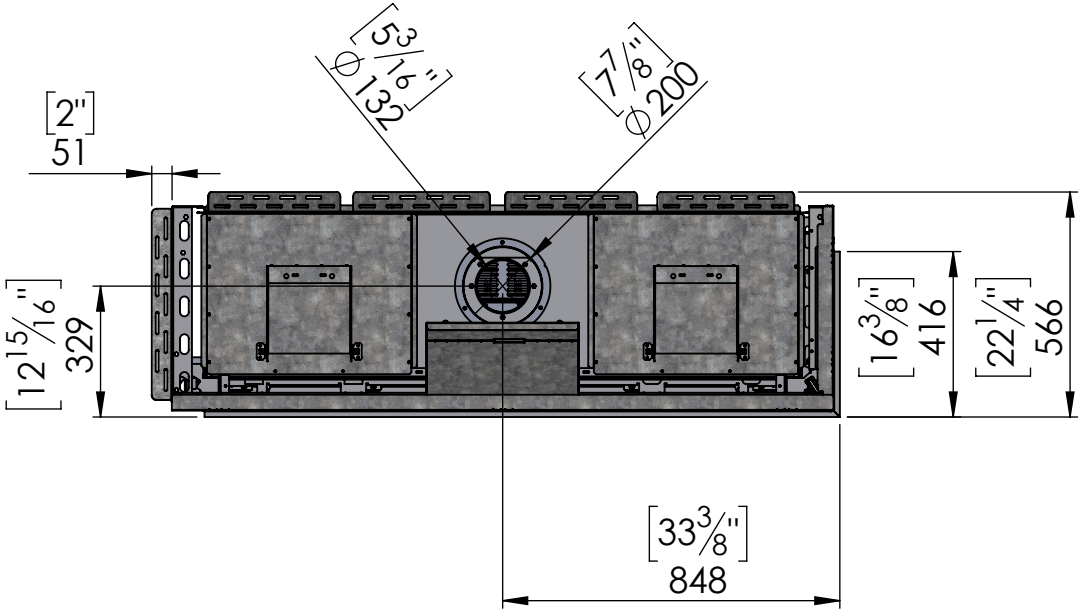

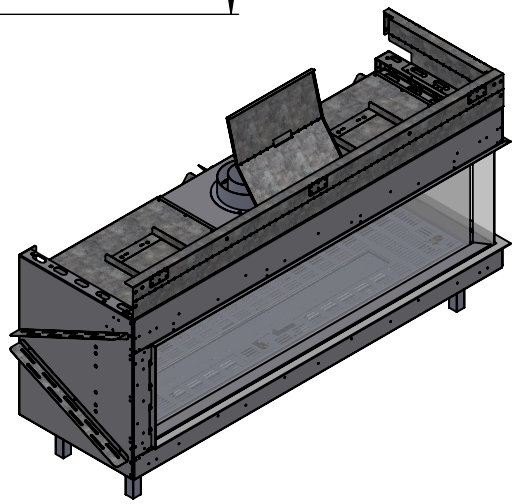

9/21/2021