ORTAL
YOUR LIFE. YOUR FIRE

# Stand Alone 110 TS with Decorative Base

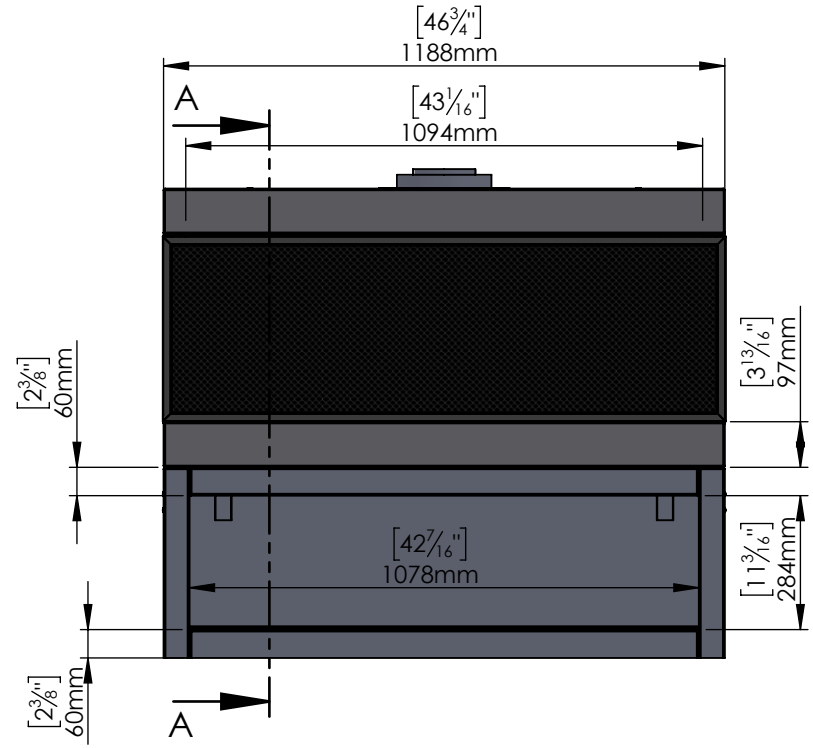


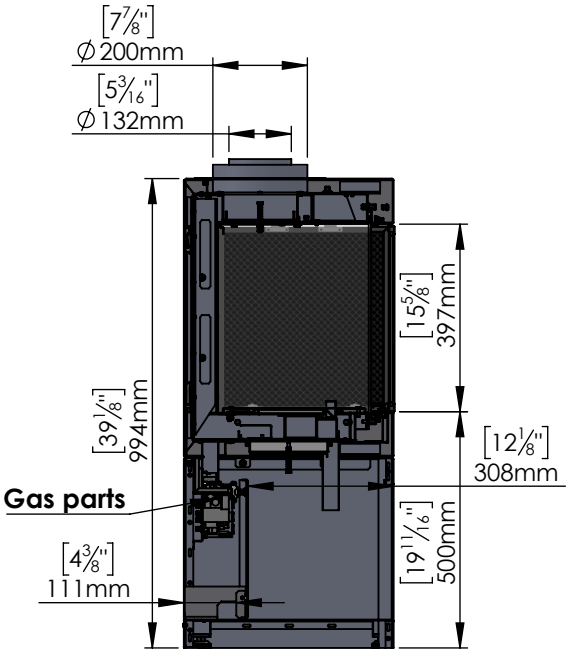


SECTION A-A
SCALE 1 : 16

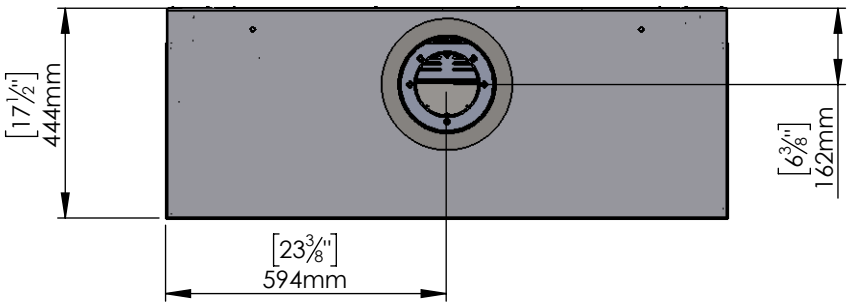


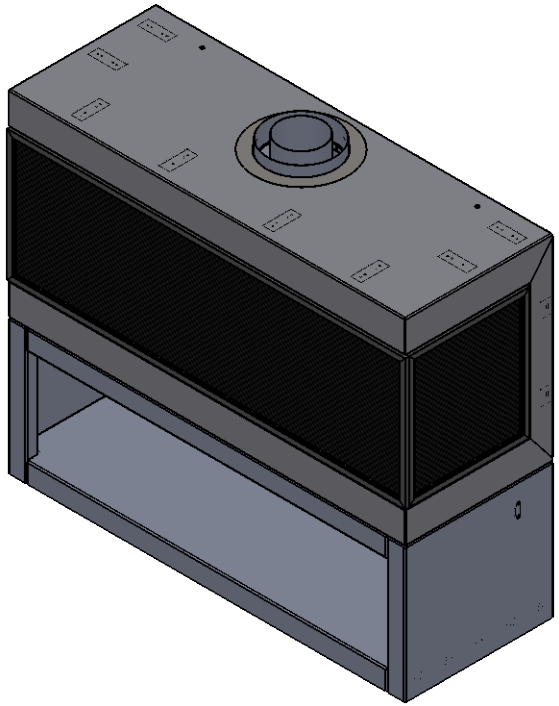

6/28/2020