ORTAL
YOUR LIFE. YOUR FIRE

200H Tunnel Double Glass

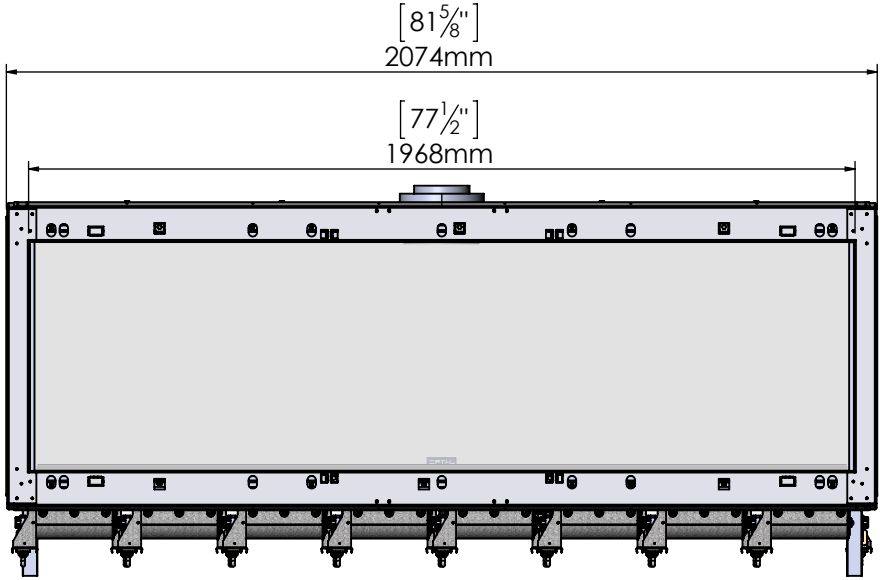

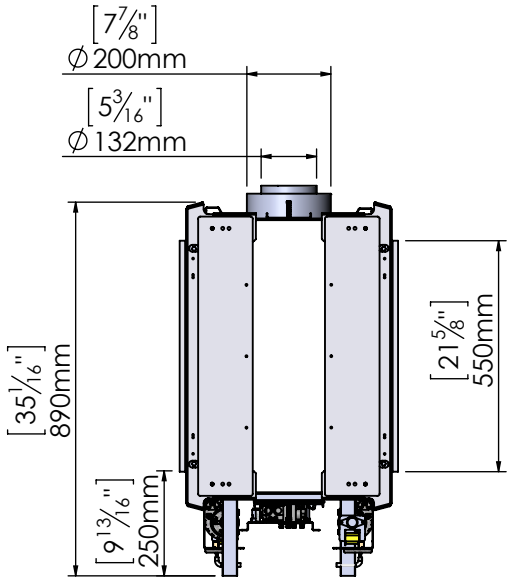

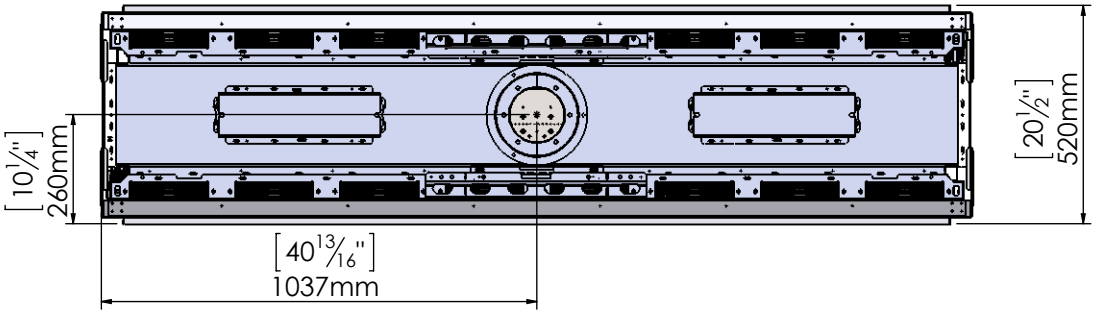

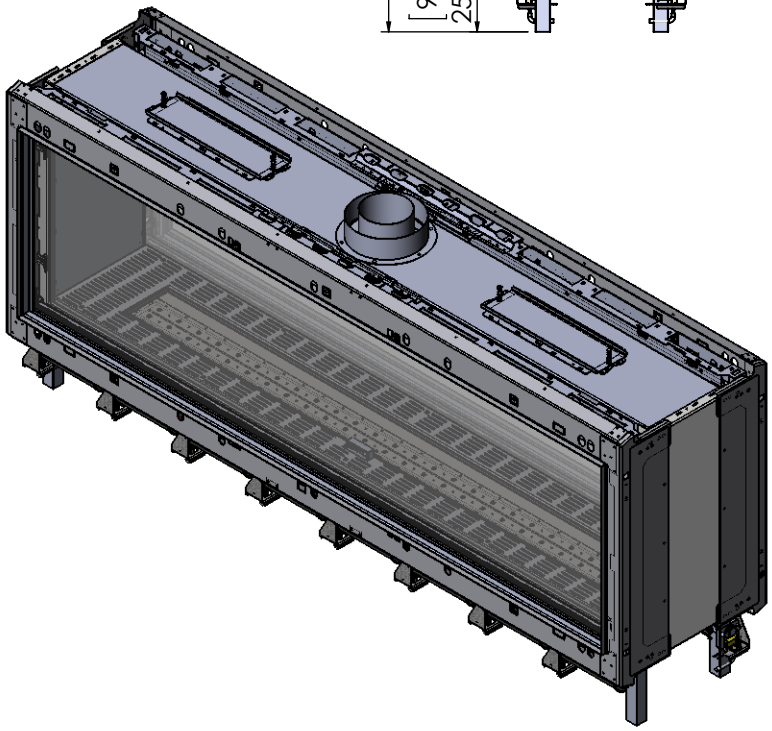

2/25/2020